技 术 协 议 **TECHNICAL AGREEMENT**				
技术协议编号： TA No.：	YL602-E-01			
船号： Hull No.：		船名： Ship name：	45M HYBRID FAST CREW BOAT	
入级： Class：	Notation : HULL H MACH, CREW TRANSFER VESSEL, SEA AREA 3 Additional notation : CLEANSHIP, CYBER RESILIENT, BIORISK SECURED, SMART (H1,MH3) DATA-INFRA, ELECTRIC HYBRID (PM, PB, ZE MODE),DYNAPOSAM		挂旗： Flag：	Panama/ Singapore
地点： Place：	Guangzhou			
项目： Subject：	**DP1**			
制造厂/制造国： Manufacturer/Country：				
代理商： Agency：				
数量： Quantity：	1 套/每船 1 Set（s）/per ship			
买方： Buyer:	广州赢亮设计研发有限公司 & 福建明泰船舶科技有限公司	卖方： Seller:		
签字： Signature：		签字： Signature：		
船东 Owner	OCTAGEN MARINE VENTURE PTE LTD	船厂 Shipyard	奥龙	
签字： Signature：		签字： Signature：		
设计公司 Design company	Mega Salutes Ship Design Sdn Bhd			
签字： Signature：				

一、概述 **GENERAL**

a) 本协议是用中文和英文书写，若有矛盾，须以英文为准。

This agreement, written in Chinese and English language, must be according to English when contradiction occurs.

b) 设备及材料应符合合同签订时 BV 船级社的最新规范要求。技术规格书与 BV 规范有冲突，则以 BV 规范为准。

Equipment and material shall be according to the latest rule ofBVClassification society at the time when the contract is executed. If there is any description in the technical agreement is conflict withBV rule, BV rule will apply.

c) 卖方应保证的质保期以商务合同为准。

The seller shall guarantee that the warranty period on business contract shall prevail.

d) 在设备出厂试验前 30 天，卖方应通知买方、船东、船厂参加试验并同时交检查/试验资料。

30 days prior to shop delivery test for the equipment, SELLER should inform BUYER, OWNER, SHIPYARD, DESIGNto attend the test and at the same time submit the inspection/test information to them..

e) 待商务合同签订之后，本协议才能生效。

This agreement shall become effective on the date when the contract is signed.

f) 图纸的迟交和罚款：

Delay delivery of drawings and penalty:

除人力不可抗拒事故者外，卖方应按照本协议第 3 项向买方及时寄送图纸和技术资料。

Except for force majeure cases, the SELLER should send these drawings and technical materials to BUYER in time according to item 3 in this agreement.

一旦迟交这些图纸（以邮戳为准），卖方应付给买方每一星期按货物总值的 0.5%的迟交罚款。此项罚款总额不超过全部货物总值的 5.5%，由买方付款进行扣除。

In case of delay delivering of these drawings, as per postmark, the SELLER shall pay to the BUYER for every week of delay a penalty amounting to 0.5% of the total value of the goods. The total amount of penalty shall not however exceed 5.5% of the total value of the goods and is to be deducted by the BUYER directly at the time of payment.

卖方的送审图纸应满足买方的安装设计要求,否则予以退回由此引起的推迟应按上面条款计算。

Drawings submitted for approval by the SELLER shall meet installation design requirements by the BUYER and otherwise shall be rejected. Consequential delay shall be calculated in accordance with above-stated provisions.

g) 制造厂需保证向买方提供与工作图(根据退审意见修改后的图纸)相一致的设备,若生产过程中需有任何的改动,应及时联系买方并征得买方同意,并书面做出修改标记及说明寄给买方。若到货与工作图不符,厂家负全责。

The manufacturer shall guarantee that the equipment is supply the buyer shall conform to the working drawings (modified according to comments). In case any modification is necessary during the process of manufacture the manufacturer shall immediately contact and obtain consent from the buyer and send the buyer the marking of modifications and the explanations. If delivered equipment not conform to the working drawings, manufacturer should be responsibility for all costs.

h) 所提供的设备及零配件均必须是商务合同生效后生产的符合合同及本技术协议的产品。

Equipment and parts provided are to be produced after the contract become effective and in compliance with the requirement of the contract and technical agreement.

i) 卖方的确认图、工作图应将买卖双方商定的任何修改除在封面说明外，必须在图面上作明显的标记以区别于不改的部分，重要性能的修改必须征得买方同意。

All revisions agreed by the buyer and the seller is to be noted on the cover of confirmation and working drawings. Any amendment should be marked clearly in these drawings. The revision on equipment performance is to be agreed by the buyer.

j) 厂家必须对我们的确认意见在三个工作日内做出回复，有困难的话也必须在期限内说明。
Maker shall reply to buyer after receiving buyer's confirmation within three working days.

k) 完工图必须与所提供的设备是一致的，并且尽可能使用印刷白图，以便于长期保存。
The finished drawing is to coincide with the provided equipment, and suitable for long-term preservation.

l) 每个设备均应在显眼的地方装有不锈钢或铜铭牌，上面有设备的名称、规格型号、制造厂名、IP 等级、防爆等级、生产日期及压力容器产品检验有效期等有关设备本身的特性。
Each equipment is to be labeled with a nameplate that should be stainless steel or brass with equipment name, model No. and the maker's name, IP grade, EX-proof grade,production date and Pressure vessel product inspection period etc.

m) 设备出厂前必须做好保养工作，其保养必须能确保有至少 1 年及以上的有效期。
Sufficient preservation works shall be done by maker before delivery. At least one year period without maintenance is required.

n）设备商对设备的质保期为交船后 12 个月。在质保期内，设备因设计、材料或制造工艺不良等引起的故障或损坏，制造厂商应及时免费维修或更换零部件。
The Seller's warranty period for the equipment is 12 months after delivery of the ship. During the warranty period, if the equipment fails or is damaged due to poor design, material or manufacturing process, the manufacturer shall promptly repair or replace the parts free of charge.

二、供图范围

SCOPE OF DRAWING TO BE SUPPLIED

a) 确认图：____5___份
Approval drawing: 5 copies per ship

b) 工作图（根据退审意见修改后的图纸）:___5 份/船
Working drawing (Drawings modified according to comments) 7copies per ship

c) 完工图:5 份/船
Final drawing 5 copies per ship

d) 合同签订后 10 个工作日内，卖方应向买方提交确认图。
After the contract is signed, SELLER should submit the approval drawings to BUYER within 10 working days.

e) 在收到确认图后，买方应退回 1 份确认图及其意见书，若在 10 个工作日内，买方不退确认书，这意味着买方对确认图没有意见。
After receiving the approval drawing, BUYER will return 1 copy of approval drawing with comments. If BUYER has not returned the approval drawings within 10 working days, that means BUYER has no comments on the approval drawing.

f) 在收到退回的确认图后，在 10 个工作日内卖方应提交工作图给买方。
SELLER should submit the working drawings to BUYER within 10 working days after receiving the approval drawings returned.

g) 所有图纸，手册和资料为英文版或中英文版。
The drawings, manuals and documentations shall be in Englishor Chinese English version.

三、图纸的内容：

DETAIL OF THE DRAWINGS AS FOLLOWING

序号 No.	图纸名称 Name of drawing	确认图 App. Draw.	工作图 Work draw.	完工图 Final draw.	备注 Remarks
1	使用及维修说明书 Description instruction & maintenance manuals		√	√	
2	外型图 (包括传感器布置)及三维模型图(.sat) Outline diagram (including sensor arrangement)and 3D model（.sat）	√	√	√	
3	管系图 Piping diagram	√	√	√	
4	控制系统图 Control system diagram	√	√	√	
5	电气原理及接线图 Electric wiring & connection diagram	√	√	√	
6	运行参数表 Operation data sheet	√	√	√	
7	附件清单 Accessory list	√	√	√	
8	备件清单(带示意图) Spare list & tool list (with diagrams)	√	√	√	
9	试验程序方法 Test procedure & method	√	√	√	
10	安装说明书 Installation manual	√	√	√	
11	安装图 Installation diagram	√	√	√	
12	与外部管路联接的接口坐标图 Coordinate diagram of connector for external piping	√	√	√	

说明：Note

1. 确认图、工作图、完工图均应装订成册，并有封面及目录。
   Confirmation, working and finished drawings are respectively to be bound up into one volume with covers and contents.
2. 控制系统图、电气原理及接线图、设备外形图、散装零件图、管系原理图、接口布置图用 AutoCAD 设绘，并每套设备提供 2 份拷贝（用光盘或 U 盘）。
   Control system diagram, Electric wiring & connection diagram，Outline diagram，separate part diagram, Piping diagram and diagram of connector for external piping should draw by AutoCAD, and supply 2 copies per setuse a CD or USB stick.
3. 试验程序方法用 Word 版，并每套设备提供 2 份拷贝（用光盘或 U 盘）。

Test procedure & method should use Microsoft word, and supply 2 copies per setuse a CD or USB stick.

四、服务时间（每船）。

SERVICE DATE (PER SHIP).

a)制造厂应提供 3 次（共 10 工作天）的安装监督及调试服务（每条船）。并保证每次到厂是同一调试员调试。

Maker should servex times (x working days). For installation supervision &commissioning for whole package(Each vessel). Every time come to shipyard are same service man .

b）制造厂应按船厂预先通知的时间派技术人员协助船厂完成系泊试验及航行试验工作。并报验给船东、ABS、船厂，及时解决试验、使用中出现的质量问题。

Maker shall send service personnel to assist the shipyard in completing the dock trials and sea trials at the time notified in advance by the shipyard. And report to the shipowner, ABS, shipyard, timely solve the quality problems in the test and use.

c）制造厂应在船厂对买方与船东技术人员进行培训。

Maker shall train the buyer's and owner's technicians at the shipyard.

五、 基本要求及供货范围（包括附件，超规范的备件、工具及船厂在试验时使用的易损件）。

BASIC REQUIREMENTS & SCOPE OF SUPPLY (INCLUDING ACCESSORIES, SPARE PARTS AND TOOLS BEYOND REGULATIONS AND CONSUMABLES USED FOR TESTS AT SHIPYARD)

a) 本技术协议书所有供货范围应满足 IMO、 SOLAS、挂旗国(TBC)、入级的船级社(BV)等规则的要求(系指商务合同签订日前所公布的规范规则)和技术要求。如有不符合要求之处， 卖方应及时提供修改资料并无偿地补充设备和功能部件。

The equipment must comply with the latest requirement of IMO, SOLAS, the country of flag (TBC), Class BV, etc, which have been in effective before the contract is sighed. Any discrepancy shall be covered by seller free of charge.

1) Other Rlues and Regulations applicable to the VESSEL

b) 所供货设备、备件和附件应是买方要求交货日期一年内生产的设备。

The delivered equipment， spare parts and accessories shall be manufactured within one year before the date of shipment.

c) 卖方的确认图、工作图应符合双方签署的技术协议书. 除将买卖双方任何修改写在封面说明外,必须在图面上作明显的标记以区别于不改的部份，重要性能的修改必须征得买方同意。否则买方有权退回，卖方应重新发确认图、工作图给买方。

Supplier’s Approval and Working Drawings must comply with the specific requirement stipulated in the Technical Agreement. Any amendment shall be listed on the cover, and clear marks should be made to distinguish from those un-changed. No Significant amendment should be executed before buyer’s confirmation..

d) 应在本技术协议书中，写明设备所需的调试仪器，以及设备和电缆的安装要求。

Instruments during equipment commissioning, installation and cable requirement are to listed out to buyer.

e) 如设备按买方要求安装在组装台内，应由卖方负责直接将设备发运组装厂家。

If the equipment should be equipped in the console, which required by BUYER, the seller should deliver the equipment to the console builder manufactory advised by buyer.

f) 写明制造厂家通信录。

Seller is to provide the maker’s mailing address, telephone and fax number and the contact persons.

g) 由制造厂家提供确认图、工作图和完工图应为白图且装订成一册,并有设绘、校对、审核者三人签署的日期的封面及目录,图幅尺寸为 A3 或 A4。不允许使用蓝图,否则买方拒绝受理。

The Approval, Working and Final drawings with cover and list provided by the seller, shall be in booklet form, and to be signed by three persons with date on cover, those documentation can be in either A3 or A4 paper. Blue print is not acceptable.

h) 应列出设备、附件规格型号、数量、尺寸、重量、重心、电源电压、频率、相数、消耗功率等技术性能指标。

Specific details of the equipment and accessories should be listed, which includes model, part numbers, dimensions, weight, center of gravity， power supply with frequency and phase, power ratings and performance etc.

i) 每一个独立安装设备，必须标明安装处所、外型尺寸、重量、设备空间最小留用尺寸、吊运方式，应配的填料函的数量及内孔直径以及电缆进入孔的尺寸（如有不符，卖方负责解决）。备附件应有示意图。

Each system / equipment should come with the sufficient installation instructions, necessary maintenance place,weight , dimensions , hoist method and cable gland packing， etc. Spare parts and accessories should be labeled for easy identification.

j) 各设备直流配电回路应为双线绝缘。

Two independent cables shall be used in the DC Power Supply.

k) 接线图必须标明每一条芯线的特性，芯线的编号和接线标号。

In the connection drawings, the cable terminals of the interconnecting cable shall be labeled, (including numbers of the core and connection) to avoid mismatch.

l) 设备需提供电缆填料函，并确认设备的 IP 防护和防爆等级满足要求。厂家应提供金属填料函。

The equipment is to be supplied the cable gland, and make sure theequipment IP rate and EX-proof grade can meet the requirement. Maker should supply metal packing.

m) 所有设备和附件需提供清晰的中英文标签，并附有装箱清单。

All equipments and accessories shall be clearly labeledin Chinese and English, and identified with the packing list.

n) 所有的备品按规范推荐的建造标准和制造厂标准。

All spare parts shall be supplied according to rule recommended the Builder's standard and the manufacturer's standard.

o）设备厂家需提供的无石棉证书/声明。如果设备装船后被检验出含有石棉，设备厂家负全责。

Maker should provide Asbestos-Free Certificate / Statement issued. If finding asbestos in the equipment after installation, maker should be responsibility for all costs.

p) 设备厂家应根据入级符号GP的要求，提供有害物质清单和清单有效性申明。

Maker should provide Material Declaration (MD) and Supplier’s Declaration of Conformity (SDoC) , according to class notation green pasport（GP）requirement.

q）厂家提供所有接口的配对接头或法兰、外部连接的软管、电缆填料函等。特殊起吊用具由设备商提供。

All counterfittings or flanges, hoses for external connections, cable stuffing boxes, etc. should be supplied by maker. Special lifting tools should be supplied by maker.

r) 设备颜色需由船厂认可。

The colour of equipment should be confirmed by shipyard.

s）电制：交流 440 伏/60 赫兹；交流 230 伏/60 赫兹；直流 24 伏。

power: AC 690V/60Hz；AC 440V/60Hz；AC 240V/60Hz；DC24V.

t) 所有电机启动器都应是船用产品。电机在 15 KW 以下采用直接启动，电机在 15 KW 到 55 KW 之间采用星三角启动。

All motor starters to be suitable for marine use. Direct-on-line starter for motors 15 KW and under ,star-delta starter for motors between 15 KW and 55KW

u) Ambient Air temperature 环境温度： 11～45℃；

Relative air humidity 相对湿度： 95%(max)；

Sea water temperature 海水温度： 18～35℃；

v） 备件及工具

Spare parts and tools

1）所有设备的备件满足行业标准和处南极、北极除外的航区要求；

The spare parts of all equipment meet the industry standards and the requirements of the navigation area except Antarctica and Arctic;

2）专用及通用工具按制造厂标准配齐；

Special and general tools in accordance with the maker's standards

3）在技术规格书中应注明设备标配供货范围，如买方增加供货范围（备品备件等），应明确单列在增补供货范围内。

The scope of supply of standard equipment shall be indicated in the technical specification. If the buyer increases the scope of supply (spare parts, etc.), it shall be clearly listed in the supplementary scope of supply.

w）Compliant with the relevant requirements of BV NR659 Cyber Security (2024-07 edition) and IACS UR E26.

满足BV NR659 Cyber Security 2024_07 及UR E26 E26相关要求

六、 运输和保护

TRANSPORT AND PROTECTION

a）设备制造商应提供运输货物有效和必要的包装，以防止货物在转运途中损伤、损坏或丢失，该包装应牢固可靠，并采取防潮、防锈、防腐蚀、防震动以及其他防止货物损伤、损坏的合理保护措施，从而保护货物能经受多次搬运、装卸以及远洋和内陆的长途运输。因包装不妥而引起货物的锈蚀、损伤、损坏和丢失等问题，设备制造商应对其负责。对于木质包装材料，应由输出国家或地区植物检疫机构认可的企业按中国确认的检疫除害方法处理并加施 IPPC 专用标识。

The equipment manufacturer shall provide effective and necessary packaging for the transportation of the goods to prevent damage, damage or loss of the goods in transit, the packaging shall be firm and reliable, and take moisture, rust, corrosion, shock and other reasonable protective measures to prevent damage and damage to the goods, so as to protect the goods from multiple handling, loading and unloading and long distance transportation in the ocean and inland. The equipment manufacturer shall be responsible for the corrosion, damage, damage and loss of the goods caused by improper packaging. For wood packaging materials, they should be treated by enterprises recognized by the plant quarantine agency of the exporting country or region in accordance with the quarantine and disinfection methods confirmed by China and apply IPPC special marks.

b）涉及到产品因运输原因需要拆卸或拆分的部分，应在装箱清单中明确，并由设备制造商派人到船厂将设备安装成整体。

Parts of the product that need to be disassembled or split for transportation reasons should be specified in the packing list and sent by the equipment manufacturer to the shipyard to install the equipment as a whole.

七、船舶建造规格书要求 **THE REQUIREMENT OF SHIP TECHNICAL SPECIFICATION**

4.0 DYNAMIC POSITIONING SYSTEM

DP1 to be installed for vessel. Specification and requirements for DP related equipment shall complywith BV's DYNAPOS AM notation.

DP system to be supplied and installed by vendor. All control and equipment associated with the DP to be integrated by yard.

DP control system set to be installed at aft console which consist of but not limited to:

- Control panel with 3-axis joystick
- Touch display
- Computer
- Power supply unit
- IO and control unit

Wind velocity : 12m/s (approx. 24 knots)

Navigation notation : Sea Area 3 (2.5m < Hs < 4m)
Current velocity : 1m/s (approx. 2 knots)
Wave periods : 10 seconds

八、设备技术规格（包含证书形式）

Proposal for the Supply of Navis NavDP Series Dynamic Positioning Control System.

Navis NavDP 动力定位系统

Technical Specification 技术协议

Document ID NE2553

文档号

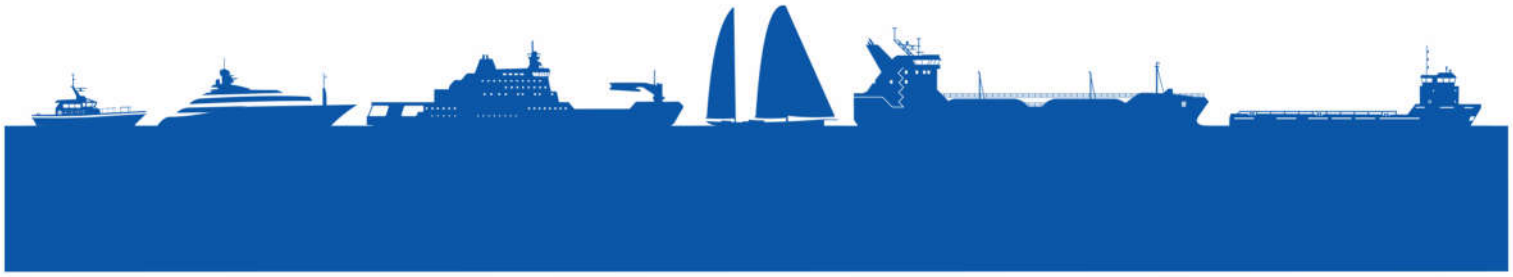

Creation date 创建日期	7.2.2026	Document ID 项目号	NE2553
Vessel owner 船东		Quotation Date 报价日期	
Shipyard 船厂		Prepared By 编制	Ming
Designer 设计		Specification: 规格	DP1
Classification society 船级社	BV	Project 项目	45m FCB

本文件是为客户准备的特定项目，如上所述，关于提供动态定位控制系统。它包含 Navis Engineering Oy 的专有信息，并以商业保密方式发布。未经书面许可，本文件的内容不得泄露给任何第三方

Revision	Date	Modification	By
0	07/02/2026	Initial Revision 初版，中英文版本	Ming

Address: Navis Engineering Oy Tuupakantie 3 A, 01740 Vantaa, Finland
Phone: +358 9 250 9011
Fax: +358 9 250 9012
Web: http://www.navisincontrol.com
E-mail: sales@navisincontrol.com

国内销售服务：
上海丽鳍海事技术有限公司
上海市浦江镇浦秀路 1536 弄 16 号

陈锡义
135 0194 3609
Xiyi.chen@lidomarine.net

Table of contents目录

1 GENERAL PROJECT INFORMATION 项目信息 5

1.1 RFQ - DOCUMENTS REVIEWED 客户提供文件清单 5
1.2 DP CONTROL SYSTEM CLASS NOTATION 船级符号 5
1.3 THRUSTER CONFIGURATION 推进器配置 6
1.4 VESSEL'S POWER PLANT CONFIGURATION AND POWER SUPPLY ARRANGEMENTS 电力布置 6
1.5 SENSORS AND POSITION REFERENCE SYSTEMS 传感器和位置参考系统 7

2 SYSTEM DIAGRAM 系统图 8

3 SCOPE OF SUPPLY 供货范围 9

3.1 DP AND IJ SYSTEM SCOPE DP 和 IJ 系统范围 9
3.2 SCOPE OF SUPPLY 供货范围 12
3.3 SENSORS AND POSITION REFERENCE SYSTEMS 传感器和位置参考系统 17
3.4 DOCUMENTATION SCOPE SUMMARY 文档资料 21

4 SITE SERVICES 现场服务 22

5 PROJECT SERVICES 项目服务 22

6 SYSTEM DESCRIPTION 系统描述 23

6.1 BASIC PRINCIPLES 基本功能 23
6.2 NAVDP SYSTEM - OPERATION MODES NAVDP 系统 - 操作模式 30
6.3 NAVDP SYSTEM FUNCTION 系统功能 35

Abbreviations 简称

BV – Bureau Veritas 法国船级社

CO – Commercial offer 商业报价

DP CS – Dynamic positioning control system 动力定位控制系统

FCP – Fixed control panel 固定式控制面板

FMEA – Failure Mode and Effects Analysis 失效模式与效果分析

GA – General arrangement drawing 总布置图

IJ CS – Independent Joystick control station 独立操纵杆控制站

MCP – Main control panel 主控制面板

NA – Non applicable 不适用

PCP- Portable control panel 移动控制面板

PRS – Position reference system 位置参考系统

PLC – Programmable logic controller 可编程逻辑控制器

TBD – to be discussed 待讨论

TA – Technical agreement 技术协议书

VRS – Vertical reference sensor 垂直位置参考传感器

1 General project information 项目信息

1.1 RFQ - documents reviewed 客户提供文件清单

The following documents were received from the Customer as part of RFQ or follow up communication. These documents were considered together with applicable Classification Rules in order to prepare this revision of our Quotation:

以下接收到的文件用于本项目，这些文件被认为符合船级社要求的

Received 是否收到	Document 文件	Date 日期	Document ID 文件编号	Revision 版本
NO	GA drawings 总布置图			
NO	Specification 规格书			
NO	One-line diagram 单线图			
NO	Other 其它			

1.2 DP control system class notation 船级符号

Class 等级	Rules 船规
DP-1	BV

Proposed NavDP series dynamic positioning control system is compliant with above Class requirements as per notation above.

本协议所述 NavDP 动力定位系统满足上述船级社和船级符号所要求的条件。

1.3 Thruster configuration 推进器配置

The vessel has the following thruster configuration to be used in DP mode:
以下推进器在 DP 模式下会被使用：

Thruster location 推进器位置	Thruster name 推进器名称	Thruster type 推进器类型	Characteristics 规格	Qty 数量	Note 说明
	BTT 艏侧推	FPP 固定桨	0.9ton(Max Thruster) -	2	Motor Drive 电机驱动-
	ST 艉部推进器	FPP 固定桨	1350HP	2	-
	Rudder 舵机			2	Hydraulic 液压

1.4 Vessel's power plant configuration and power supply arrangements 电力布置

The vessel has the following power plant configuration to be used in DP mode:
以下动力在 DP 模式下会被使用：

Power plant 发电站	Characteristics 规格	Qty 数量	Note 说明
主发电机	440V 60HZ 130KW-	2	

NavDP is powered from the single-phase supply 230VAC/60Hz.
NavDP 动力定位系统电制为单相 230VAC/60Hz

1.5 Sensors and position reference systems 传感器和位置参考系统

In accordance with Class requirements the following minimum number of sensors and position reference systems are to be interfaced with DP control system:

船级社对传感器和位置参考系统的数量要求如下：

Type 型式	PRS* 位置参考系统*	Gyro 电罗经	Wind 风速传感器	VRS 运动传感器
Q-ty 数量	**2**	**1**	**1**	**1**

* – In case more than one positioning reference system is required, at least two shall be based on different principles.

* – DP2 船舶至少需要两个基于不同原理的定位基准系统。

2 System diagram 系统图

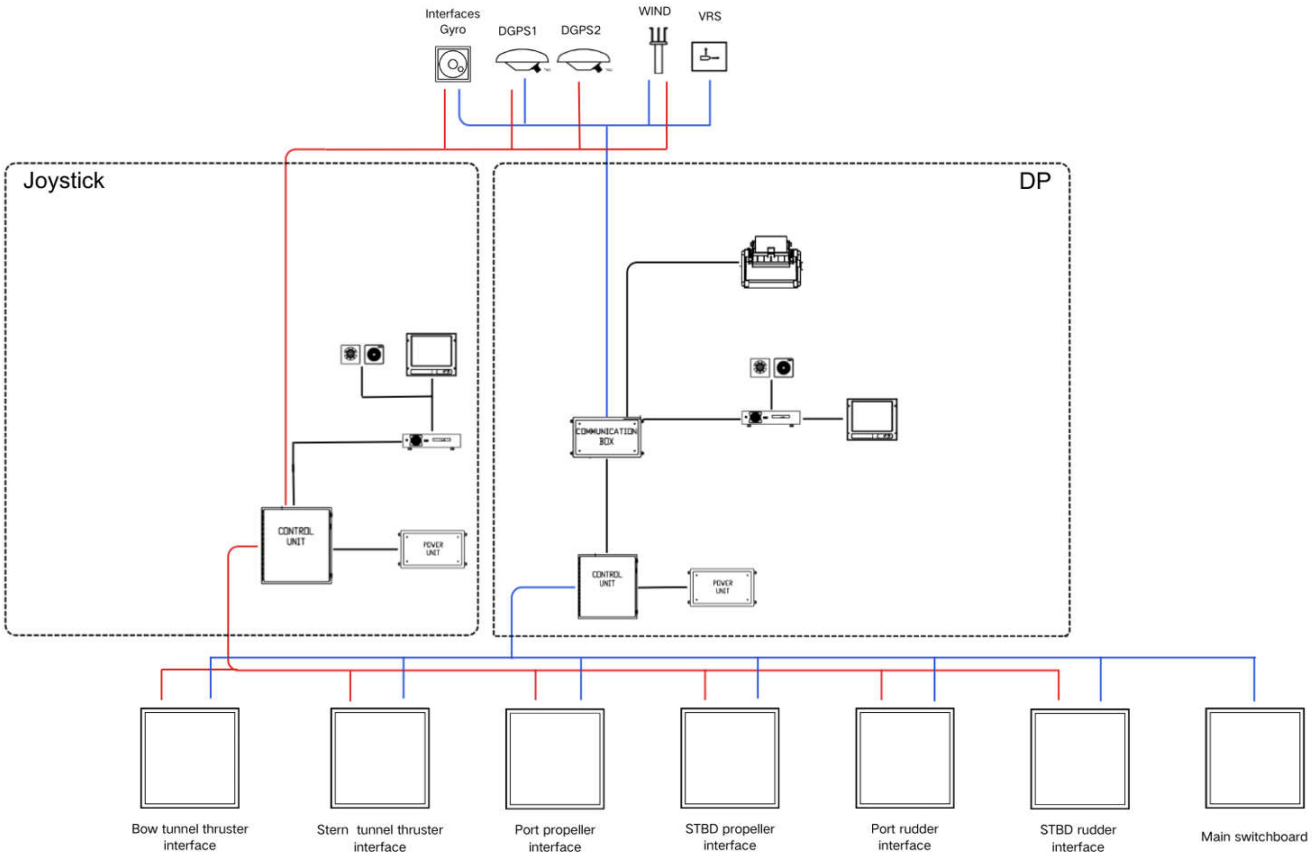

3 Scope of supply 供货范围

Dynamic positioning control system proposed herein - NAVIS NavDP– consists of powerful marine grade computers, PLC input/output modules and serial port modules for digital data input/output.

Navis NavDP系统由强大的船用级计算机，PLC 输入/输出模块和用于数字数据输入/输出的串行端口模块组成。

3.1 DP and IJ System Scope DP 和 IJ 系统范围

Station 操作站	Element 部件	Location 位置	Note 说明
DP	Control panel with 3-axis joystick 控制面板带 3 轴控制手柄	AFT 后驾	MCP-B
DP	Touch screen display 触摸显示屏	AFT 后驾	24ouch screen
DP	Marine Computer 船舶用电脑 »无风扇船用电脑，搭载第四代 Intel® Core™ i5 双核处理器 » -15°C ~ +55°C 宽温 » 隔离保护 4 x RS-232/422/485 隔离串口 »隔离 18 V~36 V 直流输入	AFT 后驾	
DP	Control Unit 控制单元 型号：CP-P2-13 颜色 RAL 7035 保护等级 IP44	AFT 后驾	

DP A/B	Communication Box 通讯箱 型号：CB-01-08 颜色 RAL 7035 保护等级 IP44	AFT 后驾	
DP	Power Unit with UPS Function 电源单元（带 UPS） 型号：PU-12-UPS 系统失电时 UPS 可使系统运行 30 分钟 颜色 RAL 7035 保护等级 IP44	AFT 后驾	
DP	Laser Printer 激光打印机	AFT 后驾	HP
IJ	Control panel with 3-axis joystick 控制面板带 3 轴控制手柄	AFT 后驾	MCP-B
IJ	Marine Computer 船舶用电脑 »无风扇船用电脑，搭载第四代 Intel® Core™ i5 双核处理器 » -15°C ~ +55°C 宽温 » 隔离保护 4 x RS-232/422/485 隔离串口 »隔离 18 V~36 V 直流输入	AFT 后驾	

IJ	Control Unit 控制单元 型号：CU-P9-01 颜色 RAL 7035 保护等级 IP44 集成通讯箱	AFT 后驾	
IJ	Touch screen display 触摸显示屏	AFT 后驾	24ouch screen
IJ	Power Unit with UPS Function 电源单元（带 UPS） 型号：PU-94-UPS 系统失电时 UPS 可使系统运行 30 分钟 颜色 RAL 7035 保护等级 IP44	AFT 后驾	
DP/IJ/Man	Steering Mode Selector SMS-3, "DP-OFF-IJ" 模式选择开关	AFT 后驾	

3.2 Scope of supply 供货范围

##	Item 描述	The DP system included the quantity DP 系统包含数量	The IJ system included the quantity IJ 系统包含数量	Note 说明
1.	**Hardware scope, basic configuration 硬件范围，基本配置**			
1.1.	Touch screen display 触摸显示器	1	1	24”Touch screen 24 英寸触摸屏
1.2.	Control panel with 3-axis joystick 控制面板带 3 轴控制手柄	1	1	MCP-B+3-axis joystick
1.3.	Control Computer 控制电脑	1	1	
1.4.	Control Unit 控制单元	1	1	
1.5.	Communication Box 通讯箱	1	0	
1.6.	Power Unit(with UPS) 电源单元	1	1	With UPS 电源单元内带 UPS
1.7.	Alarm Printer 报警打印机	1		A4 Laser Printer A4 网络激光打印机
2.	**Hardware scope, additional configurations 硬件范围，附加配置**			
2.1.	Mode selector 模式选择开关	1		

3.	**System Interfaces 系统接口** **(Note: Specific interface information needs to be confirmed at the interface meeting** **注:具体接口信息需在接口会上确认)**			
3.1.	**Interface Name** **接口名称**	**DP**	**IJ**	**Interface Imformation** **接口信息**
3.2.	Thruster Interfaces 推进器接口	6		**SELECT 信号:** Dry Contact 干触点, Thruster 推进器->DP/IJ 控制系统 **SELECT 信号:** Dry Contact 干触点, DP/IJ 控制系统 ->Thruster 推进器 **READY 信号:** Dry Contact 干触点, Thruster 推进器->DP/IJ 控制系统 **COMMAND 命令信号:** 4…20 mA 电流信号, DP/IJ 控制信号 ->Thruster 推进器 **FEEDBACK 反馈信号:** 4…20 mA 电流信号, Thruster 推进器->DP/IJ 控制信号

3.3.	PMS 电站	1	0	Modbus TCP 或者硬线 GE breaker status-发电机断路器状态 GE load-发电机负载 Tie breaker status-母排断路器状态 Thruster load-各推进器负载 Thruster breaker status-推进器断路器状态 TBD 等等
3.4.	Gyro 电罗经	1	1	Serial IEC 61162-1 series
3.5.	DGPS 差分全球定位系统	2	1	Serial IEC 61162-1 series
3.6.	VRS/MRU 船舶运动传感器	1	NA	Serial
3.7.	Wind Sensor 风速风向仪	1	1	Serial IEC 61162-1

4.	**DP MODE 操作模式**			
4.1.	Manual position/heading 手动位置/航向控制	+		
4.2.	Auto heading 自动航向	+		
4.3.	Model control 模式控制	+		Dead reckoning
4.4.	Built-In trainer 内置模拟器	+		
4.5.	Auto position 自动定位	+	NA	
4.6.	Mixed joystick/auto control 手动/自动混合模式	+	NA	
4.7.	Speed vector (auto speed) 速度矢量（自动速度）	+	NA	
4.8.	Low speed track 低速航迹	+	NA	
4.9.	High speed track 高速航迹	+	NA	
4.10.	Target following 目标跟踪	+	NA	
4.11.	Minimal power heading 最小能耗航向模式	+	NA	
4.12.	Hold area 区域定位（电子锚泊）	+	NA	
5.	**System Function 系统功能**			
5.1.	Thrust allocation 推力分配	+		
5.2.	Auto wind compensation 自动风力补偿	+		
5.3.	Thrust ability diagram 推力能力图	+		
5.4.	Alarm system 报警	+		
5.5.	System monitoring 系统监测	+		
5.6.	Remote center of rotation 远程旋转中心	+	NA	
5.7.	Power Load Monitoring and Blackout Prevention 负载监测与全船失电预防	+	NA	

5.8.	Consequence analysis 定位能力分析	+	NA	
5.9.	DP capability analysis 定位后果分析	+	NA	

3.3 Sensors and position reference systems 传感器和位置参考系统

##	Item 描述	Q-Ty R-数量	Note 说明
1	动态传感器		
1.1.	Navis VRS 	1	Vertical reference sensor Roll/pitch. Measuring range: +/-30° Accuracy: 0.1° Country of manufacture:Finland 纵倾/横倾 测量范围: +/-30° 精度: 0.1° 横摇、纵摇测量范围： +/-30°; 横摇、纵摇测量精度： +/-0.1°; 工作温度: –40 ~ +60℃ 保护等级:IP65 制造国：芬兰
2	电罗经-仅提供接口		
3	风速风向仪		
3.1.	Wind Sensor 超声波风速风向仪 	1	Speed Observation range:0-65m/s Speed Accuracy:±0.1 m/s (0.2 mph) or 2 % of reading, whichever is greater Direction Observation range:0~360° Direction Accuracy:±2°

##	Item 描述	Q-Ty R-数量	Note 说明
3.2.	Wind display 风速风向仪显示器 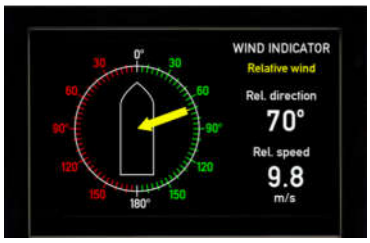	1	Communication interfaces :1xRS-422 NMEA Country of manufacture:Finland 风速测量范围:0-65m/s 风速测量精度:±0.1m/s 或读数的 2%, 二者中较大者 风向测量范围:0~360° 风向测量精度:±2° 通讯方式 1xRS-422 NMEA 工作温度范围: -40 to +60°C 制造国：芬兰
4	**DGPS 卫星定位系统**		

##	Item 描述	Q-Ty R-数量	Note 说明
4.1	Hemisphere Victor VS1000 多星多频 DGNSS 	1	GPS, GLONASS, BeiDou, Galileo, & Atlas Manufacturer: Hemisphere Model: Victor VS1000 1059 channel，Support the Beidou system Differential support： SBAS, Atlas (L-band) With GPS Precision:2.5m With SBAS Precision:0.6m With Atlas Precision:0.1m includes SBAS\Galileo\Beidou Three types of free differential Atlas(L-band) Paid differential service The supply system includes： - High-precision antenna - VS1000 Receiver (with display) - Antenna cable 30 m -Power cable 2 m GPS、LONASS, BeiDou, Galileo, & Atlas 厂家: Hemisphere 型号:Victor VS1000 1059 通道，支持北斗系统 差分支持： SBAS, Atlas (L-band) 带 GPS 精度:2.5m 带 SBAS 精度:0.6m 带 Atlas 精度:0.1m 包含 SBAS\Galileo\北斗三种免费差分 Atlas (L-band)为付费差分服务 供货系统包含： - 高精度天线 - VS1000 接收机（带显示） - 天线至接收机电缆 30 米 - 电源电缆 2 米 设计国：美国

##	Item 描述	Q-Ty R-数量	Note 说明
4.2	SAAB R6 GNSS NAV System GPS/GLONASS/BEIDOU/GALILEO L1 萨博 R6 GPS 	1	Comprising: • R6 Control and Display Unit with mount kit; • power cable, 2m; • ethernet cable, 5m; • R5 NAV DGNSS MKIII Sensor with integrated Junction Box; • MGL5 DGNSS antenna; • antenna cable 30 m-50m; Conventional accuracy: <1m Opening differential accuracy: ≤0.1m; Country of manufacture:Sweden 包含: • R6 控制和显示单元 • 2m 电源电缆 • 5m 网络电缆 • R5 NAV DGNS 传感器和接线盒 • MGL5 天线 • 天线电缆 30 米 常规精度:<1m 开通差分精度: ≤0.1m; 制造国: 瑞典

3.4 Documentation scope summary 文档资料

##	Document 文档	Format 格式	Deadline 提交时间
1	Preliminary cabling diagram with cable specification 认可图电缆系统图及电缆配置图	Electronic 电子版	Within 2 weeks after the contract takes effect 合同生效后 2 周内
2	Preliminary external wiring 认可图外部接线图	Electronic 电子版	Within 2 weeks after the contract takes effect 合同生效后 2 周内
3	Overall dimension drawings 尺寸图	Electronic 电子版	Within 2 weeks after the contract takes effect 合同生效后 2 周内
4	Operation manual （Instruction Manual） 操作手册（说明书）	Electronic 电子版和纸质	Provide it upon shipment 发货时提供
5	Cabling diagram with cable specification 接线图和电缆规格	Electronic 电子版	Two weeks before shipment 发货前两周
6	External wiring 外部接线图	Electronic 电子版	Two weeks before shipment 发货前两周
7	Operation manual 操作手册	Electronic 电子版	**Provide it upon shipment** 发货时提供
8	Dock and sea trials procedure 码头和海试程序	Electronic and Paper 电子版和纸质	Provide it upon shipment 发货时提供
9	Final cabling diagram with cable specification 完工电缆系统图及电缆配置图	Electronic and Paper 电子版和纸质	Provide it upon shipment 发货时提供
10	Final external wiring 完工外部接线图	Electronic and Paper 电子版和纸质	Provide it upon shipment 发货时提供
11	Final overall dimension drawings 完工尺寸图	Electronic and Paper 电子版和纸质	Provide it upon shipment 发货时提供
12	“As installed” cabling diagram with cable specification 完工电缆布置与规格图	Electronic and Paper 电子版和纸质	Within 2 weeks after the sea trial 试航后 2 周内
13	“As installed” external wiring 完工外部接线图	Electronic and Paper 电子版和纸质	Within 2 weeks after the sea trial 试航后 2 周内

4 Site Services 现场服务

The vessel supervision and commissioning work included next stages:
船舶的现场指导和调试：

Scope 工作内容	Man/days 人/天
Checking of the installation and cabling of Navis NavDP series at dockside 码头检查电缆接线	5
Dockside testing and commissioning of the system 系统调试和测试	3
Sea trials and fine tuning of the system 试航和精调	2
On board familiarization training for crew 船员培训	1

5 Project services 项目服务

The following project services are provided:
提供以下项目服务

- Project management for the duration of the contract-合同期间的项目管理
- Complete set of documentation in English-完整的英文文档
- Factory acceptance test (FAT). Travel expenses and any other costs for yard's/owner's are not included-工厂验收测试(FAT)
- Compliant with BV E27 cyber security 符合 BV E27 网络安全

6 System description 系统描述

6.1 Basic principles 基本功能

NAVIS NavDP provides manual, automatic or combined (semi-automatic) ship control. There are both separate and simultaneous NAVIS NavDP control of ship position (coordinates) and heading.

NAVIS NavDP 提供手动、自动或组合（半自动）船舶控制。NAVIS NavDP 对船舶位置（坐标）和航向进行单独或同时控制。

Vessel mathematical model **船舶数学模型**	The mathematical model is a special calculating module (hydro- and aerodynamic ship description). This module continually calculates the ship's response from external disturbances as well as from on board thrusters (thrusters, etc). The response is indirectly estimated from sensor data. Wind speed and wind angle, relatively to a ship, are parameters of wind disturbance. Wind forces and moment are calculated based on aerodynamic ship hull characteristics. Data from follow up control system sensors are parameters defining thruster's thrust. Using these parameters, instantaneous forces from propeller, rudder and thruster are calculated. All ship particulars: mass, draft, dimensions, hull type, propulsion unit type, thrusters types and structure, superstructure location etc. are taken into account in the mathematical model, which is modified in accordance with sea trial data and then applicable to the actual ship. The mathematical model adjustment is as accurate as possible and describes all possible modes of ship motion from external disturbances as well as on board thrusters. 该数学模型是一个特殊的计算模块(用于描述液压和空气动力船舶)。该模块不断地计算船舶对外部干扰以及来自船上推进器（推进器等）的响应。该响应是由传感器数据间接估算所得的。 对于船舶来说风速和风的角度是风扰动的参数。根据气动力学船体特性计算风力和力矩。后续控制系统传感器的数据是定义推进器推力的参数。利用这些参数，可以计算出来自螺旋桨、方向舵和推进器的瞬时力。 有船舶规格：质量、吃水、尺寸、船体类型、推进单元类型、推进器类型和结构、上部结构位置等。在数学模型中可以根据海试数据进行修改，然后用于实际船舶。 数学模型的调整尽可能是准确的并且描述了所有可能的船舶运动模式，从外部干扰和船上的推进器。

Kalman filter 卡尔曼滤波	Ship motion control algorithms use ship motion parameters: fore-aft and athwartships forces, yaw rate, heading and coordinates. Also, it is necessary to know the parameters of current: speed and angle relatively to a ship. However not all parameters can be measured quite accurately and some of them cannot be measured at all, therefore it is necessary to estimate these parameters. Parameters are connected to each other via ship motion equations and the mathematical model allows their estimation. Ship motion parameters also depend on external disturbances (wave), which cannot be measured. Wave disturbance is taken into account by wave filters. The mathematical model is not perfect. For this reason, measured data and data received from the mathematical model are used together and are processed by the Kalman filter algorithm. The Kalman filter uses a ship motion mathematical model for predicting measurements. Ship position data comes from several sensors (with different characteristics). Measurements, processed by filter, are weighed in accordance with their noise levels and then used for updating of ship state, received from the mathematical model. Kalman filter algorithm allows generation of an optimal estimation of ship motion parameters and parameters of current. Also, if measurements are absent, such algorithms allow a comparatively accurate prediction of ship motion parameters for some period of time. 船舶运动控制算法使用船舶运动参数：前后力和航向力、偏航率、航向和坐标。此外，还需要了解电流的参数：相对于船舶的速度和角度。 然而，并不是所有的参数都能非常准确地测量，其中一些参数根本无法测量，因此有必要对这些参数进行估算。参数通过船舶运动方程相互连接，这在数学模型中是被允许的。 船舶运动参数也取决于无法测量的外部干扰(波)。波形滤波器考虑了波的干扰 这个数学模型并不完美。因此，将测量数据和从数学模型接收到的数据一起使用，并通过卡尔曼滤波算法进行处理。卡尔曼滤波器使用一个船舶运动数学模型来预测测量值。船舶位置数据来自于多个传感器（具有不同的特性）。测量值经过滤波器处理后，根据其噪声水平进行称重，然后用于更新从数学模型中接收到的船舶状态。 卡尔曼滤波算法允许生成对船舶运动参数和电流参数的最优估算。此外，如果没有测量，这种算法允许在一段时间内相对准确地预测船舶的运动参数。

Joystick control **操纵杆控制**	Following modes are used with Joystick control： -Desired values of fore-aft and athwartship forces and rotation moment -Desired values of fore-aft and athwartship speed vectors 以下模式用于操纵杆控制装置： 前后保护力和旋转力矩的理想值 前后和反向速度矢量的理想值

Wave filter **波形滤波器**	Wave filter is an extension of the Kalman filter. The wave filter takes into account high frequency ship motion under wave disturbance. Three-second order filters are used: • For description of wave disturbance along the longitudinal axis • For description of wave disturbance along the transversal axis • For description of disturbing moment relative to the vertical axis Wave filters are intended for high-frequency wave disturbance filtering and low frequency ship motion extraction. 波形滤波器是卡尔曼滤波器的一种扩展。波形滤波器考虑了波扰动下的高频船舶运动。 使用了三阶滤波器 • 用于描述沿纵轴的波扰动 • 用于描述沿横轴的波扰动 • 用于描述相对于垂直轴的干扰力矩 波形滤波器用于高频波干扰滤波和低频船舶运动提取。

Optimal controller **优化控制**	Optimal controller continually calculates longitudinal, transversal forces and rotation moment values, required for ship position keeping for transfer to a desired position. The controller consists of the two following parts: • Excursion feedback • Feed forward controller (active wind compensation). Excursion feedback includes heading control and position control. Heading Control includes: • LQ optimal controller LQ • Integral component, providing compensation of current and uncompensated slowly changed disturbances Position control includes: • LQ optimal controller • Integral component, providing compensation of current and uncompensated slowly changed disturbances Excursion Feedback provides control forces' generation for ship transfer to a desired position. These forces are generated based on the difference between desired and filtered values of coordinates and heading and also on the difference between the desired and current speeds. The Feed Forward Controller provides forces, which are equal in absolute value and have an opposite direction to wind forces. There is no special feedback loop for current disturbance compensation. Current disturbance is taken into account via current speed and direction, which are estimated in the Ship Mathematical model. Current disturbance is a provided calculation for hydrodynamic forces in the mathematical model, and is automatically taken into account by the controller. 优化控制不断计算纵向力、横向力和旋转力矩值，需要保持船舶位置转移到所需的位置。 该控制器包括以下两个部分: • 偏移反馈 • 前馈控制器（主动风补偿） 偏移反馈包括航向控制和位置控制 航向控制包括: ● LQ 最优控制器 ● 整体组件，提供对电流和未补偿的缓慢变化的扰动的补偿 位置控制包括: ● 最优控制器 ● 整体组件，提供对电流和未补偿的缓慢变化的扰动的补偿 偏移反馈为船舶转移到所需的位置提供了相应的控制力。这些力是根据坐标和航向的理想值和过滤值之间的差异，以及理想速度和当前速度之间的差异而产生的。

Thrust Allocation 推力分配	The control computer processor continuously calculates the longitudinal force, lateral force, and rotational torque, which are necessary for controlling the position and heading of the ship. The required forces and torques are provided by the thrust of the propeller, rudder, and thrusters. The thrust allocation function employs advanced optimization mathematical methods to provide each thruster with the most appropriate thrust and the minimum control power. 控制计算机处理器不断地计算纵向力、横向力和旋转力矩，这是船舶位置和航向控制所必需的。所需的力和力矩由螺旋桨、方向舵和推进器的推力提供。推力分配函数采用先进的优化数学方法，提供给每个推进器最合适的推力，以及最小的控制功率。

DP Ability Prediction **DP 能力预测**	NAVIS NavDP series uses a special algorithm for DP ability prediction.NAVIS NavDP When necessary, the generation of rotary moment is given priority. The system is designed to provide the necessary rotary moment under any ship's operating conditions. At a given rotary moment value, propeller, rudder and thruster can only provide fore-aft and athwartships forces values in certain limited ranges. As a result, each rotary moment value causes a limited set of fore-aft and athwartships force vectors. The Thrust Allocation Algorithm continuously calculates the boundary of this set and displays it on the monitor (in fore-aft and athwartships force coordinates). A current summary force vector, a summary vector of external disturbances, a current rotary moment and a rotary moment of external disturbances are also displayed in that window. External disturbances (wind, wave and current) force and moment are calculated based on sensors data and reconstructed parameters of external disturbances. In this way, an operator continuously has the following information: • The summary thrusts, which can be developed by propeller, rudder and thruster at every directions of motion. • Ratio between external disturbances forces and possible thrusters thrust. • System's thrust reserve in the current direction. For every chosen propeller, rudder and thruster configuration, this special diagram is calculated. This diagram shows the power, which is necessary for ship position keeping, and ship heading angle. The same diagram is developed for each propeller, rudder or thruster from this configuration. NAVIS NavDP 系列使用一种特殊的算法进行 DP 能力预测。 必要时，优先产生旋转力矩。该系统的目的是在任何船舶的运行条件下提供必要的旋转力矩。在一个给定的旋转力矩值下，螺旋桨、方向舵和推进器只能在一定的有限范围内提供前后和反向船舶的力值。这会导致每个旋转力矩值有一个有限的前后力矢量和反向力矢量。 推力分配算法连续计算该集合的边界，并将其显示在监视器上（在前后和垂直力坐标中）。该窗口还显示了电流汇总力矢量、外部扰动的汇总矢量、电流旋转力矩和外部扰动的旋转力矩。根据传感器数据和重建的外部扰动参数，计算了外部扰动（风、波和电流）的力和力矩。 这样的话一个操作员就可以连续地拥有以下信息： • 推力总览，它可以由螺旋桨，方向舵和推进器在每个运动方向发展。 • 外部干扰力与可能的推进器推力之比。 • 系统在当前方向上的推力储备 对于每种选择的螺旋桨、方向舵和推进器配置，都会计算出这个特殊的图表。该图显示了保持船舶位置所需的功率和船舶航向角。根据该配置，为每个螺旋桨、方向舵或推进器绘制了相同的图表

6.2 NavDP system - operation modes NavDP 系统 - 操作模式

Mode 模式	Features description 功能描述
Standby mode 备车	Ship Control is provided from the Bridge Control Console, using engine telegraph levers, thruster control levers and steering levers or wheel. The system is in operation and is ready for control acceptance. 船舶控制由驾驶台提供，使用发动机或推进器控制杆和转向杆/方向盘。系统正在运行，并准备好接受 DP 控制。
Manual/Joystick Control 手动控制	The surge/sway forces and the yaw moment are controlled manually by using the joystick/knob. • Adjustable joystick gain (sensitivity) • All speed suppor 通过使用操纵杆/旋钮手动控制纵向/横向和偏航力矩。 可调操纵手柄增益（灵敏度） 支持全速度范围内控制
Auto Heading 自动航向	Automatic keeping of the operator selected vessel heading. • Hold the vessel heading • Set new heading: absolute value or offset from the previous set-point • Set rotation direction to the new heading (shortest turn/port/starboard) • Set rate of turn • Adjustable heading controller gain • Heading deviation alarm with adjustable limit 自动保持操作员选定的船舶航向。 保持船只航向 设置新航向：绝对值或与上一个设置点的偏移 将旋转方向设置为新航向（最小转弯/左舵/右舵） 设定转弯速度 可调航向控制器增益 航向偏差报警，限值可调

Mode 模式	Features description 功能描述
Auto Position 自动定位	Automatic keeping of the operator selected vessel position. • Hold the vessel position • Set new position: absolute value or offset from the previous set-point (absolute/relative to the vessel/polar) • Set transfer speed (in surge and sway directions) • Adjustable position controller gain • Position deviation alarm with adjustable limit 自动保持操作员所选择的船舶位置。 保持船舶位置 设置新位置：来自先前设定点的绝对值或偏移量（相对于船舶/极坐标的绝对值） 设置传输速度（在纵向和横向方向上） 可调位置控制器增益 位置偏差报警，限值可调
Mixed Joystick/Auto Control 混合手动/自动控制	Arbitrary combination of axis selection for auto/manual control: • Automatic/manual surge control • Automatic/manual sway control • Automatic/manual yaw control 自动/手动控制的任意选择组合： 自动/手动纵向控制 自动/手动横向控制 自动/手动艏摇控制
Speed Vector (Auto Speed) 速度矢量(自动控制)	Automatic keeping of the operator selected vessel speed vector. • Hold the vessel speed • Set new speed (digital/joystick input) • Adjustable speed controller gain 自动保持操作员所选择的船舶速度矢量。 保持船舶速度 设置新的速度（数字/操纵杆输入） 可调速度控制器增益
Model Control 模型控制	Keeping the position and heading of the vessel as precise as possible within specified time limit in the case of position and/or heading data drop-out 在位置和/或航向数据丢失的情况下，在规定的时限保持船舶的位置和航向尽可能精确。

Mode 模式	Features description 功能描述
Built-In Trainer 内置模拟器	Built-in simulator of ship motion and DP functionality intended for the crew training. • Full simulation of DP functionality • Simulation of the vessel motion and actuators dynamics • Adjustable initial data and weather conditions for simulation (wind and current speed, wave height) 船舶运动和 DP 功能的内置模拟器，用于船员培训。 DP 功能的完整模拟 船舶运动和推进器的仿真 可调初始数据和模拟天气条件（风速、水流、波高）
Hold Area 区域定位(电子锚泊) 绿色 DP	Automatic keeping the vessel in the operator-defined area in a way to minimize the control effort and power consumption. • Select the center and radius of the vessel is to be held in • Select the radius of the smaller “deadzone” circle where the vessel may drift freely • Area leaving alarm with adjustable limits 自动将船舶保持在操作员定义的区域内，以最大限度地减少控制工作量和功耗。 选择要保持的船舶的中心和半径 选择船只可以自由漂移的较小“死区”圆的半径 限值可调的区域离开报警
Minimal Power Heading 最小消耗航向	Automatically maintain heading in a way to minimize the control effort and power consumption while auto positioning, holding area, low speed tracking and ROV/Target/Multi target following 在自动定位、等待区域、低速跟踪和水下机器人/目标/多目标跟随时，以最大限度地减少控制工作量和功耗的方式自动保持航向
Target Following 目标跟踪	Automatic following a moving target (Remotely Operated Vehicle or other). Requires suitable hydroacoustic system or laser/microwave radar. • Speed and position control during the ROV/Target following operations: • Offset from ROV/Target (in ground, relative or polar coordinates) • Reaction circle with adjustable radius • Set following speed Heading control during the ROV/Target following operations: • Manual heading control • Hold heading (set by operator) • Heading to ROV/target (with offset)

Mode 模式	Features description 功能描述
	自动跟踪移动目标（遥控潜水器或其他）。需配备合适的水声系统或激光/微波雷达。 • ROV/目标跟踪操作中的速度和位置控制: • 与 ROV/目标的偏移量（在地面坐标系、相对坐标系或极坐标系中） • 半径可调的反应圈 • 设定以下速度 • ROV/目标跟踪操作中的航向控制: • 手动航向控制 • 保持航向（由操作员设置） • 前往 ROV/目标位置（带偏移量）

Mode 模式	Features description 功能描述
Low Speed Tracking 低速航迹	Automatic following the operator defined track at a low speed with high accuracy by controlling the position and speed of the vessel. The touchdown point to follow the track may be the vessel center of rotation or other reference point (cable laying plough, head of the dredging pipe etc.) Speed and position control during the track following: • Hold the vessel speed (set manually by digital input/joystick or defined in the waypoint table) • Select the track direction (forward/reverse) • Stop on the track • Set the track approaching speed (in across direction) • Waypoint passing strategy (stop at waypoint or pass at a predefined speed) • Adjustable waypoint turn radius (set by operator or defined in the waypoint table) • Track ending strategy (stop at the last waypoint/follow the last leg prolongation) • Track offset • Track cross track error alarm with adjustable limit • Adjustable gain of the track controllerStart the track with a predefined waypoint (optional) • Heading control during the track following: • Manual heading control • Hold heading (set by operator or defined in the waypoint table) • Keep the crab angle 通过控制船舶的位置和速度，以低速高精度自动跟随操作员定义的轨迹。跟随轨迹的触地点可以是船舶的旋转中心或其他参考点（如铺缆犁、疏浚管头部等）。轨迹跟随过程中的速度和位置控制： • 保持船速（通过数字输入/操纵杆手动设置或在航点表中定义） • 选择轨道方向（前进/后退） • 在赛道上停车 • 设置轨道接近速度（横向） • 航点通过策略（在航点停车或在预定速度下通过） • 航点转弯半径可调（由操作员设置或在航点表中定义） • 跟踪结束策略（在最后一个航点停止/沿最后一段延长线跟踪） • 轨道偏移 • 具有可调限值的轨道交叉跟踪误差报警 • 轨迹控制器的增益可调 以预定义的路点开始轨迹（可选） • 航迹跟踪过程中的航向控制： • 手动航向控制 • 保持航向（由操作员设置或在航点表中定义） 保持蟹角

6.3 NavDP system function 系统功能

Function 功能	Features description 特征描述
Thrust Ability Diagram 推力能力图	View in graphical form Fore Aft and Athwartships control forces and rotary moment of the ship and the area of achievable control forces and moment. 以图形形式查看船舶的前后控制力、横向控制力和旋转力矩以及可实现控制力和力矩的区域
Auto Wind Compensation 自动风力补偿	When this function is selected, control forces and moments are generated to compensate for wind disturbance. 当选择该功能时，会产生控制力和力矩来补偿风带来的船舶扰动
Alarm System 报警	The built-in alarm generating system includes online diagnostics, message reporting and alarm acknowledgement function. • DP Alert Status System • (red, yellow, green) • Online Alarm Printing (DP system only)Voice Alarms 语音警报 • Online Diagnostics • Message Reporting 内置的报警生成系统包括在线诊断、消息报告和报警确认功能。 DP 状态警报系统 （红，黄，绿三种状态） 在线报警打印（仅限 DP 系统） 语音警报 在线检修 消息报告
Remote Center of Rotation 远程旋转中心	A possibility to choose a preset point (bow, center, stern) as the center of rotation. Applicable for auto positioning and manual operations. 可以选择船体周围和内部的任何点作为旋转中心。适用于自动定位和手动操作。
DP Capability Analysis DP 能力分析	This function calculates and presents the maximum weather conditions when the vessel is still able to keep the position. Real mode and Hypothetic mode allow to analyze situation with regards to current or estimated state of thrusters/ generators. 当船舶仍能保持位置时，此功能计算并显示最恶劣的天气条件。真实模式和模拟模式允许分析推进器/发电机的当前或预估状态。
Consequence Analysis DP 结果分析	Analysis of the vessel’s ability to maintain its position after a predefined, worst-case failure during operation 分析船舶在预定的最坏故障情况后保持其位置的能力
DP Class 2 Monitor DP2 系统监测	DP class 2 monitoring is performed to evaluate the system configuration compliance with the redundancy requirements for DP class 2. 执行 DP2 监测，以评估系统配置是否符合 DP2 的冗余要求。

Function 功能	Features description 特征描述
History 历史记录	System display vessel's contours in adjustable intervals and within desired time frames in the past. 系统以可调的间隔和历史时间范围显示船只的状态。
Route Management 路线管理	Managing of routes (waypoint tables) for Low Speed Tracking mode • Create and modify the route in the editor • Copy the route with possibility of reverting and applying offsets • Route loading from and saving to the USB disk • Receiving waypoints from the external computer • Route overloading and updating strategy (overload routes with the same names, save as a copy, prohibition to update the active route) 低速跟踪模式下的路线（航点表）管理 • 在编辑器中创建和修改路线 • 复制路线，并保留撤销和调整偏移量的可能性 • 从 U 盘加载路线数据并保存到 U 盘 • 从外部计算机接收航点信息 • 路由重载与更新策略（重载同名路由，保存副本，禁止更新活动路由）
Load Monitor and Blackout 负载监测与失电保护	Propeller power consumption, engine power, generator power output, and circuit breaker status monitoring Generator protection Engine protection power monitor Power alarm Power limitations of generators and Thruster systems 推进器功耗、发动机功率和发电机发电功率、断路器状态监测 发电机保护 发动机保护 电力监控 电源警报 发电机和推进装置的功率限制